# Tile Pro
# PF-100
# Tile Feeder

Crary Agricultural Solutions, LLC  October 2013

**Tile Pro**
**Crary Agricultural Solutions, LLC**
**P.O. Box 237**
**Morgan, MN 56266**
**507-249-3176**
**507-249-3146 FAX**
**Website: www.crarytilepro.com**

# Questions?

**Kenton Johnson 1-507-430-5729**
**kenton.johnson@crarytilepro.com**
**GPS/Laser controls technical support.**

**Wayne Weber 1-507-828-4548**
**wayne.weber@crarytilepro.com**
**Plow setup, general plow questions.**

**Stan Isfeld, Sales and Support 1-507-430-7677**
**stan.isfeld@crarytilepro.com**

**Crary Agricultural Solutions, LLC**

# Limited Warranty

This warranty applies to all Crary Tile Pro equipment manufactured by Crary Agricultural Solutions, LLC (Crary).
Crary warrants to the original owner of each new Crary Tile Pro product to be free from defects in material and workmanship, under normal use and service. The warranty shall extend as shown below from date of delivery. The product is warranted to the original owner as evidenced by a completed warranty registration on file at Crary and is non-transferable beyond the initial purchaser.

| **Product** | **Warranty Length** |
|---|---|
| Crary Tile Pro Plow | 1 year |
| Crary Tile Pro Trailers | 1 year |
| Crary Tile Pro Spool/Carriers | 1 year |

**THE WARRANTY REGISTRATION MUST BE COMPLETED AND RETURNED TO CRARY WITHIN 10 DAYS OF DELIVERY OF THE PRODUCT TO THE ORIGINAL OWNER OR THE WARRANTY WILL BE VOID.**

In the event of a failure, return the product, at your cost, along with proof of purchase to the selling Crary dealer. Crary will, at its option, repair or replace any parts found to be defective in material or workmanship. Warranty on any repairs will not extend beyond the product warranty. Repair or attempted repair by anyone other than a Crary dealer as well as subsequent failure or damage that may occur as a result of that work will not be paid under this warranty. Crary does not warrant replacement components not manufactured or sold by Crary.
This warranty applies only to parts or components that are defective in material or workmanship.
This warranty does not cover wear items including but not limited to knife tips, ground engaging components, bearings, tires etc.

- This warranty does not cover normal maintenance, service or adjustments.
- This warranty does not cover depreciation or damage due to misuse, negligence, accident or improper maintenance.
- This warranty does not cover damage due to improper setup, installation or adjustment.
- This warranty does not cover damage due to unauthorized modifications of the product.
- This warranty does not cover damage, deemed by a Crary representative, due to excessive stress or by exceeding the products ability and manufacturer's intended use of the product.

# Limited Warranty

Any warranty of any grade control, hydraulic components or guidance components sold on, or installed on, Crary products are subject to the original manufacture warranty and are not the responsibility of Crary.

Crary is not liable for any property damage, personal injury or death resulting from the unauthorized modification or alteration of a Crary product or from the owner's failure to assemble, install, maintain or operate the product in accordance with the provisions of the Owner's manual. Crary is not liable for any damages or expenses incurred on the host machine or on any non Crary equipment through the use of these products.

New replacement parts made by Crary carry a full 90-day, parts only, warranty from the date they are purchased.

Crary is not liable for indirect, incidental or consequential damages or injuries including but not limited to loss of crops, loss of profits, rental of substitute equipment or other commercial loss.
This warranty gives you specific legal rights. You may have other rights that may vary from area to area.

Crary makes no warranties, representations or promises, expressed or implied as to the performance of its products other than those set forth in this warranty. Neither the dealer nor any other person has any authority to make any representations, warranties or promises on behalf of Crary or to modify the terms or limitations of this warranty in any way. Crary, at its discretion, may periodically offer limited, written enhancements to this warranty.

CRARY AGRICULTURAL SOLUTIONS, LLC IS A WHOLLY OWNED SUBSIDIARY OF CRARY INDUSTRIES, INC AND RESERVES THE RIGHT TO CHANGE THE DESIGN AND/OR SPECIFICATIONS OF ITS PRODUCTS AND WARRANTIES AT ANY TIME WITHOUT OBLIGATION TO PREVIOUS PURCHASERS OF ITS PRODUCTS.

**Bolt the grey swing arm mounting bracket to the laser arm as shown in picture**

**Place the swing arm in the bracket and adjust the arm so the center of the mounting pin of the arm assembly is in the center of the plow shank.**

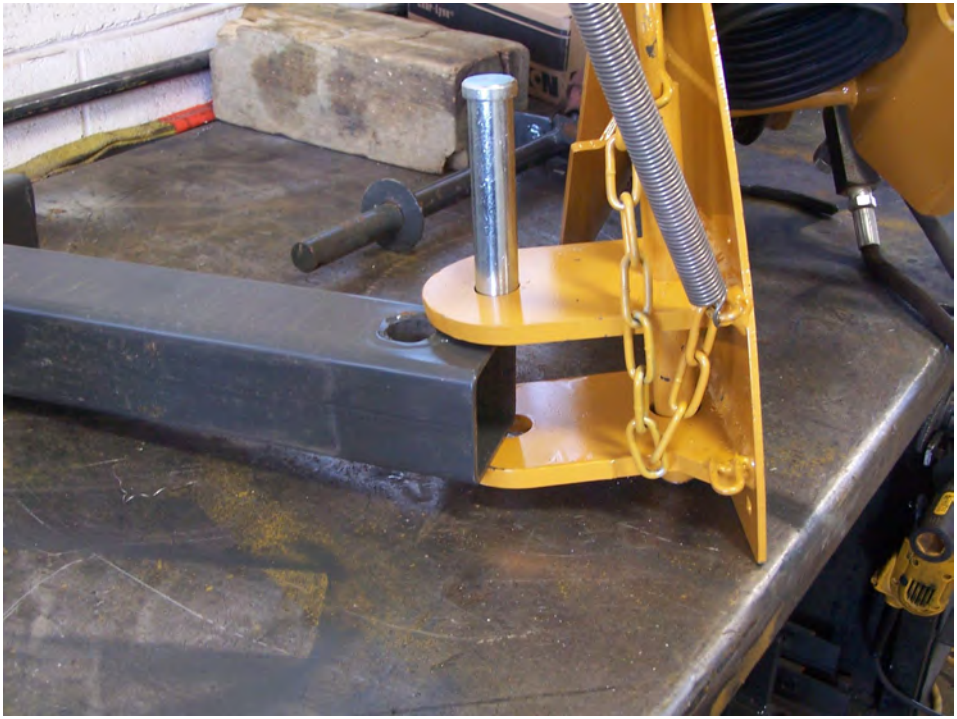

**Mount the power feeder to the arm assembly using the silver colored pin and clip.**

**The 4" and 6" boots will need to have a mounting bracket welded to them as shown on the enclosed print.**

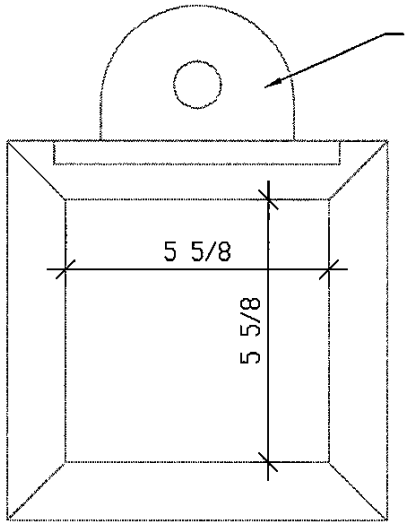


4" BOOT DETAILS

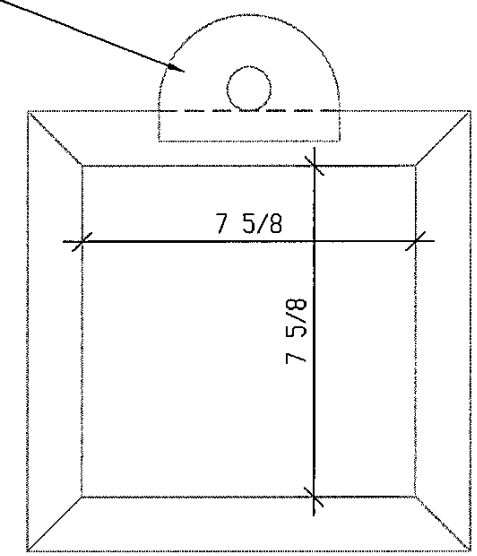


6" BOOT DETAILS

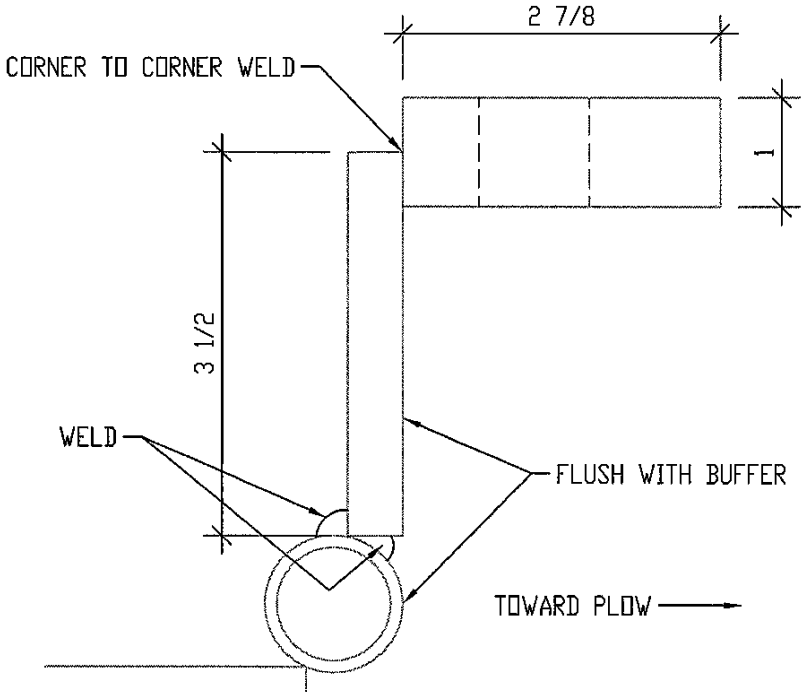


4" BOOT DETAILS

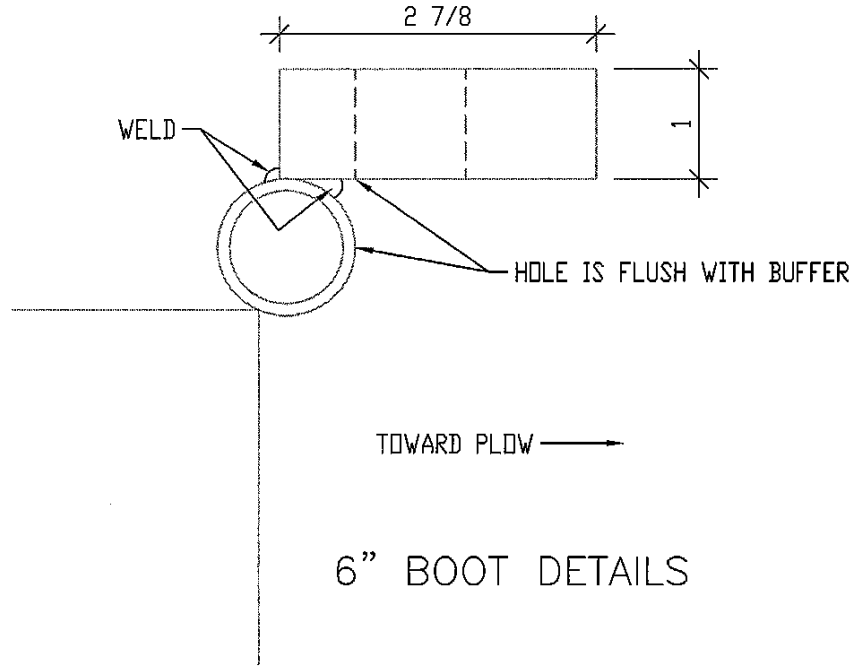


6" BOOT DETAILS